Instruction Manual

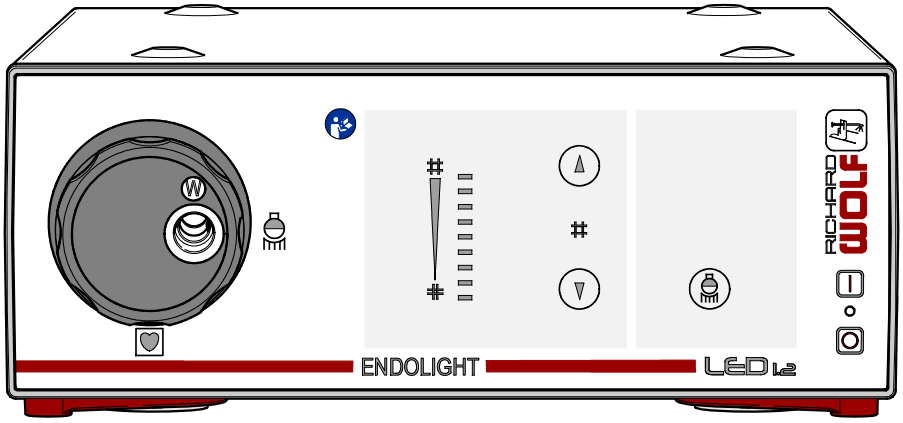

ENDOLIGHT LED 1.2 Light Projector

51610x1

⚠ Important general notes and instructions for use ⚠

Make sure that this product is used only as intended and described in this instruction manual, by adequately trained and qualified medical personnel, and that maintenance and repair are only carried out by authorized experts.

Use the product only in the combinations and with the accessories and spare parts specified in this instruction manual. Use other combinations, accessories and replacement parts only if they are expressly intended for the planned application and if the performance characteristics and safety requirements are met. The product must not be altered in any way.

Reprocess the products in accordance with the manual before every use and before return shipment to protect the patient, user and third parties.

Immediately upon receipt, check the product and its accessories for completeness and possible damage. Should the shipment give right to complaints, please inform the manufacturer or supplier immediately.

Subject to technical changes!
Due to ongoing developments, the illustrations and technical data may deviate slightly.

Safety instructions and levels of danger

Symbol	Level of danger
⚠	***WARNING!*** Failure to observe can result in death or serious injury.
⚠	***CAUTION !*** Failure to observe can result in slight injury or damage to the product.
☞	***IMPORTANT !*** Failure to observe can result in damage to the product or surroundings.
☞	***NOTE !*** Tips for optimum use and other useful information.

GERMANY
RICHARD WOLF GmbH
75438 Knittlingen
Pforzheimerstr. 32
Telephone: +49 70 43 35-0
Telefax: +49 70 43 35-300
MANUFACTURER
info@richard-wolf.com
www.richard-wolf.com

USA
RICHARD WOLF
Medical Instruments Corporation
353 Corporate Woods Parkway
Vernon Hills, Illinois 60061
Toll Free: 001 (800) 323 - 9653
Phone: 001 (847) 913 - 1113
Fax: 001 (847) 913 - 1488
sales@richardwolfusa.com
www.richardwolfusa.com

UK
RICHARD WOLF UK Ltd.
Waterside Way
Wimbledon
SW17 0HB
Telephone: + 44 20 89 44 74 47
Telefax: + 44 20 89 44 13 11
admin@richardwolf.uk.com
www.richardwolf.uk.com

BELGIUM / NETHERLANDS
N.V. Endoscopie
RICHARD WOLF Belgium S.A.
Industriezone Drongen
Landegemstraat 6
9031 Gent Drongen
Telephone: +32 92 80 81 00
Telefax: +32 92 82 92 16
endoscopy@richard-wolf.be
www.richard-wolf.be

FRANCE
RICHARD WOLF France S.A.R.L.
Rue Daniel Berger
Z.A.C. La Neuvillette
F-51100 Reims
Telephone: +33 3 26 87 02 89
Telefax: +33 3 26 87 60 33
france@richard-wolf.com

AUSTRIA
RICHARD WOLF Austria
Ges.m.b.H.
Wilhelminenstraße 93 a
A-1160 Vienna
Telephone: +43 14 05 51 51
Telefax: +43 14 05 51 51 45
austria@richard-wolf.com
www.richard-wolf.com

Marketing Office
U.A.E
RICHARD WOLF Middle East
P.O. Box 500283
AL Thuraya Tower 1
9th Floor,
Room 904, Dubai
Telephone: + 9 71 43 68 19 20
Telefax: + 9 71 43 68 61 12
middle.east@richard-wolf.com
www.richard-wolf.com

INDIA
RICHARD WOLF India Private Ltd.
JMD Pacific Square
No. 211 A, Second Floor
Behind 32nd Milestone
Gurgaon - 122 001
National Capitol Region
Telephone: + 91 12 44 31 57 00
Telefax: + 91 12 44 31 57 05
india@richard-wolf.com
www.richard-wolf.com

Contents

1	**General information**	**1**
1.1	Symbol	1
1.2	Intended use	2
1.3	Indications and field of use	2
1.4	Contraindications and side effects	2
1.4.1	Contraindications	2
1.4.2	Side effects	2
1.5	Combinations	2
1.5.1	Potential equalization	3
1.5.2	Requirements for the products / components of a combination	3
1.6	Electromagnetic compatibility (EMC)	4
1.7	Wiring schematic - Light projector in video mode	6
2	**Illustration**	**7**
2.1	Front view	7
2.2	Rear view	8
3	**Setup**	**9**
3.1	Selecting the light socket	10
3.2	Preparation	11
4	**Checks**	**12**
4.1	Visual check	12
4.2	Function check	12
4.2.1	Device function after switching on the device	12
4.2.2	Switching ON and OFF the LED	13
4.2.3	Manual brightness adjustment	13
5	**Use**	**14**
5.1	Operating principle	14
5.2	Controls and modes	14
5.2.1	Manual brightness adjustment	14
5.2.2	"Safe start“ function	14
5.2.3	Temperature protection circuit	14
5.3	Operation of light projector	15
5.3.1	Switching ON and OFF the LED	15
5.3.2	Automatic switch-on of the device, i.e. "safe start“ (e.g. after power failure)	16
5.3.3	Remote function	16
5.3.4	Taking out of service	16
6	**Reprocessing and maintenance**	**17**
6.1	Reprocessing of device	17
6.2	Maintenance	17
6.2.1	Maintenance intervals	17
7	**Technical description**	**18**
7.1	Troubleshooting	18
7.1.1	Device errors	18
7.1.2	Lamp function errors	19
7.1.3	Fault in video mode	19

7.2 Technical data 20
7.2.1 Technical Data of LED Light Source 20
7.2.2 Interfaces 20
7.3 Operating, storage, transport and shipping conditions 20
7.4 Spare parts and accessories 21
7.5 Replacing the device fuses 22
7.5.1 Disposal of product, packaging material and accessories 22

1 General information

1.1 Symbol

Symbol	Designation
	Attention, Caution
	Follow the instruction manual
	OFF (no power supply, separation from mains)
	ON (connection to power supply / mains)
	Potential equalization
	Power cut-out / Mains fuse
	Alternating current (AC)
	TYPE CF APPLIED PART
	Cold light
	Light On / Off
	Brightness control (maximal)
	Brightness control (minimal)
	Increase brightness
	Decrease brightness
	High voltage
	Heat dissipation
	Manufacturer
	Recycle the product separately. Do not discard together with other waste.
XX° XX°	Permissible temperature range
XXhPa XXhPa	Permissible atmospheric pressure range
XX% XX%	Permissible humidity range

Symbol	Designation
MET c us	A Registered Trademark of a Recognized Testing Laboratory, confirm the compliance to the standard of Medical Electrical Equipment CAN/CSA C22.2 No.60601-1 (**c**) and ANSI/AAMI ES60601-1 (**us**)
CE	Identification in conformity with medical devices directive 93/42/EEC **only valid** if the **product and/or packaging is marked with this symbol**. Products of category IIa and above, as well as sterile products or products with measuring function of category I, are additionally identified with the code no. of the notified body (0124).

1.2 Intended use

The ENDOLIGHT LED 1.2 Light Projector provides light for medical examinations as well as diagnostic and therapeutic applications specifically in endoscopy.

This product is exclusively intended for use by specialized medical personnel and must only be used by medically qualified and adequately trained persons.

1.3 Indications and field of use

Therapy and diagnosis in conjunction with endoscopic accessories.

⚠ *CAUTION!*
This device or the LED may fail.
In the case of therapeutic applications, a second light projector with the same features should be available.

☞ *NOTE!*
We recommend reading relevant literature for the planned application.

1.4 Contraindications and side effects

1.4.1 Contraindications

Contraindications directly related to the product are presently unknown.
On the basis of the patient's general condition the doctor in charge must decide whether the planned use is possible or not.
For further notes and instructions please refer to the latest medical literature.

1.4.2 Side effects

Side effects directly related to the product are currently unknown.

1.5 Combinations

☞ *IMPORTANT!*
In addition to this instruction manual, follow the manuals for the products used in combination with this product.

1.5.1 Potential equalization

The potential equalization cable establishes a direct connection between a medical electrical device and an equipotential bonding rail.
It serves to equalize differences in potential between enclosures of electrical equipment and firmly installed conductive parts in the patient environment.

1.5.2 Requirements for the products / components of a combination

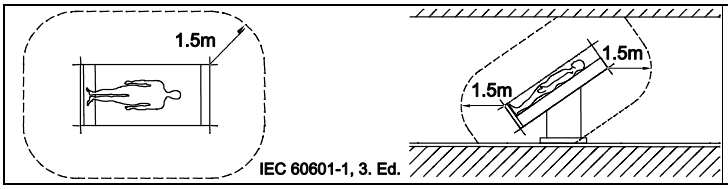

The general requirements depend on whether the products / components are inside or outside the patient environment.

Medically used room		Non-medically used room	Requirements / measures
inside the patient environment	outside the patient environment		Leakage currents to section 16.6 IEC 60601-1:2005 / EN 60601-1:2006 *
MP – MP, ~	-	-	Verification of the total patient leakage current
MP – MP, ~, **	-	-	Verification of leakage currents **a)** additional protective earth connection (consult the corresponding manufacturer), **or** **b)** additional isolating transformer for medical applications **
MP – NMP, ~, **			
MP – NMP, ~, **			
MP, NMP, ~			
MP – NMP, ~			
MP – MP / NMP, ~, **			
MP – NMP, ~, ~		-	Verification of leakage currents **a)** no plugs with metal housing, **or** **b)** additional isolation device (to avoid voltage differentials)
MP, ~		MP / NMP, ~	Verification of leakage currents **a)** common protective earth connection, **or** **b)** additional protective earth connection at **MP** (clarify with the corresponding manufacturer), **or** **c)** additional isolation device (to avoid voltage differentials), **or** **d)** no plugs with metal housing in the patient environment

	additional "isolating transformer" to IEC/ EN60601-1 **		additional isolating device to IEC/ EN 60601-1		Multiple socket strip
- - -	Functional connection	~	Power supply grid		

MP = **medical electrical device** to IEC/ EN 60601-1, ANSI/AAMI es60601-1, CSA C22.2 No. 60601-1 08
NMP = **non-medical electrical device** in accordance with product-specific IEC/EN/UL standards

* When connected via a power bar under standard conditions the earth leakage current of the power bar must not exceed 5 mA.
** e.g. Richard Wolf video cart with "isolating transformer"

☞ *IMPORTANT!*

The persons combining products to form a system are responsible for not impairing the system's compliance with performance and safety requirements, and that the technical data and the intended use are adequately fulfilled. Possible electromagnetic or other interference that may occur between the product and other products can cause faults or malfunctions.
When selecting the system components, make sure that they meet the necessary requirements of the medical environment they are used in, in particular IEC/ EN 60601-1 (3. Edition IEC/EN 60601-1, section 16). In case of doubt contact the manufacturer(s) of the system components.
Do not touch connectors for electrical connections between various components (such as signal input connectors and signal output connectors for video signals, data exchange, controls etc.) and the patient at the same time.

☞ *IMPORTANT!*

Accessories such as light cables must not have a negative impact on the classification of the applied part and must not have a conductive connection between the light socket and the cold-light connector.

1.6 Electromagnetic compatibility (EMC)

Please observe the following:
The device or system in the following called **product** always relates to the ENDOLIGHT LED 1.2.
The product does not have any performance features classified as essential performance features in accordance with IEC/EN 60601-1.

Guidelines and manufacturer's declaration - Electromagnetic emissions

The product is intended for use in the environment specified below. The user should assure that the product is used in such an environment.		
Emissions measurement / test	**Compliance**	**Electromagnetic environment - Guidelines**
HF emissions to CISPR 11	Group 1	The product uses HF energy for its internal function. The HF emission level is extremely low and it is not likely to cause any interference in nearby electronic equipment.
HF emissions to CISPR 11	Class B	The product is suitable for use in all establishments, including domestic establishments. This also includes establishments directly connected to the public low voltage power supply network that supplies buildings used for domestic purposes.
Harmonic emissions to IEC 61000-3-2	Class A	
In conformity with IEC 61000-3-3 "Emission of voltage fluctuations / flicker"		

Guidelines and manufacturer's declaration - Electromagnetic immunity

The product is intended for use in the environment specified below. The user should assure that the product is used in such an environment.			
Immunity tests	**IEC 60601 test level**	**Compliance**	**Electromagnetic environment - Guidelines**
Electrostatic discharge (ESD) to IEC 61000-4-2	± 6 KV contact discharge ± 8 KV air discharge	Yes	Floors should be wood, concrete or ceramic tile. With floors made of synthetic material, the relative humidity of the ambient air must be at least 30%.
Electrical fast transience, bursts to IEC 61000-4-4	± 2 KV for power supply lines ± 1 KV for input and output lines	Yes	Mains/line power quality should be that of a typical commercial or hospital environment.
Surge voltage (surges) to IEC 61000-4-5	± 1 KV line to line voltage ± 2 KV line to ground voltage	Yes	Mains/line power quality should be that of a typical commercial or hospital environment.
Voltage dips, short interruptions and supply voltage variations to IEC 61000-4-11	Voltage dip for 0.5 cycle > 95% U_T * Voltage dip for 5 cycles 60% U_T * Voltage dip for 25 cycles 30% U_T * Voltage dip for 5 sec > 95% U_T *	Yes	Mains/line power quality should be that of a typical commercial or hospital environment. If the user of the product requires continued operation during power mains/line interruptions it is recommended that the product be powered from an uninterruptible power supply or battery.
Power frequency (50/60 Hz) magnetic field, to IEC 61000-4-8	3 A/m	Yes	Power frequency magnetic fields should be at levels characteristic of a typical location in a commercial or hospital environment.
* NOTE: U_T is the line / mains voltage prior to application of the test level.			

Guidelines and manufacturer's declaration - Electromagnetic immunity for products that are not life-supporting

The product is intended for use in the environment specified below. The user should assure that the product is used in such an environment.

Immunity tests	IEC 60601 test level	Compliance	Electromagnetic environment - Guidelines
Conducted HF interference to IEC 61000-4-6 Radiated HF interference to IEC 61000-4-3	3 V_{rms} 150 kHz to 80 MHz 3 V/m 80 MHz to 2.5 GHz	Yes	Portable and mobile RF communications equipment should be used no closer to any part of the product, including cables, than the recommended separation distance calculated from equation applicable to the frequency of the transmitter. **Recommended separation distance:** $d = 1.2 \sqrt{P}$ $d = 1.2 \sqrt{P}$ for 80 MHz to 800 MHz $d = 2.3 \sqrt{P}$ for 800 MHz to 2.5 GHz P = Nominal power output rating of the transmitter in watts (W) (according to the transmitter manufacturer) d = recommended separation distance in meters (m) Field strengths from fixed RF transmitters, as determined by an electromagnetic site survey[1], should be less than the compliance level in each frequency range[2]. Interference may occur in the vicinity of devices with the following symbol:

REMARKS:
At 80 MHz and 800 MHz the higher frequency range applies. These guidelines may not apply in all situations. The propagation of electromagnetic waves is affected by absorption and reflexion from buildings, objects and people.

1 = The field strength of stationary transmitters (e.g. base station for radio phone, earth to earth radio stations,, amateur radio stations, radio and television transmitters) cannot be exactly predicted in theory. To assess the EMC environment due to fixed transmitters an electromagnetic site survey should be conducted. If the measured field strength in the location in which the product is used exceeds the applicable compliance level above, the product should be observed to verify normal operation.
If abnormal performance is observed, additional measures may be required, such as reorienting or relocating the product.
2 = Over the frequency range between 150 kHz and 80 MHz the field strength should be below 3 V/m.

Recommended separation distances between portable and mobile HF telecommunication devices and devices which are not life-supporting

The product is intended for use in an electromagnetic environment where HF disturbances are controlled.
The user can help prevent electromagnetic interference by maintaining a minimum distance between portable and mobile HF telecommunications equipment and the product.

Rated nominal output power of the-transmitter (Watts)	Separation distance as a function of transmitter frequency (m)		
	150 kHz to 80 MHz $d = 1.2 \sqrt{P}$	80 MHz to 800 MHz $d = 1.2 \sqrt{P}$	800 MHz to 2.5 GHz $d = 2.3 \sqrt{P}$
0.01	0.12	0.12	0.23
0.1	0.38	0.38	0.73
1	1.2	1.2	2.3
10	3.8	3.8	7.3
100	12	12	23

For transmitters rated at a nominal output power not listed in the table above, the recommended separation distance (d) in meters (m) can be determined using the applicable equation (observe frequency). P = nominal power of the transmitter in Watts (W).
REMARKS:
At 80 MHz and 800 MHz the higher frequency range applies. These guidelines may not apply in all situations. The propagation of electromagnetic waves is affected by absorption and reflexion from buildings, objects and people.

1.7 Wiring schematic - Light projector in video mode

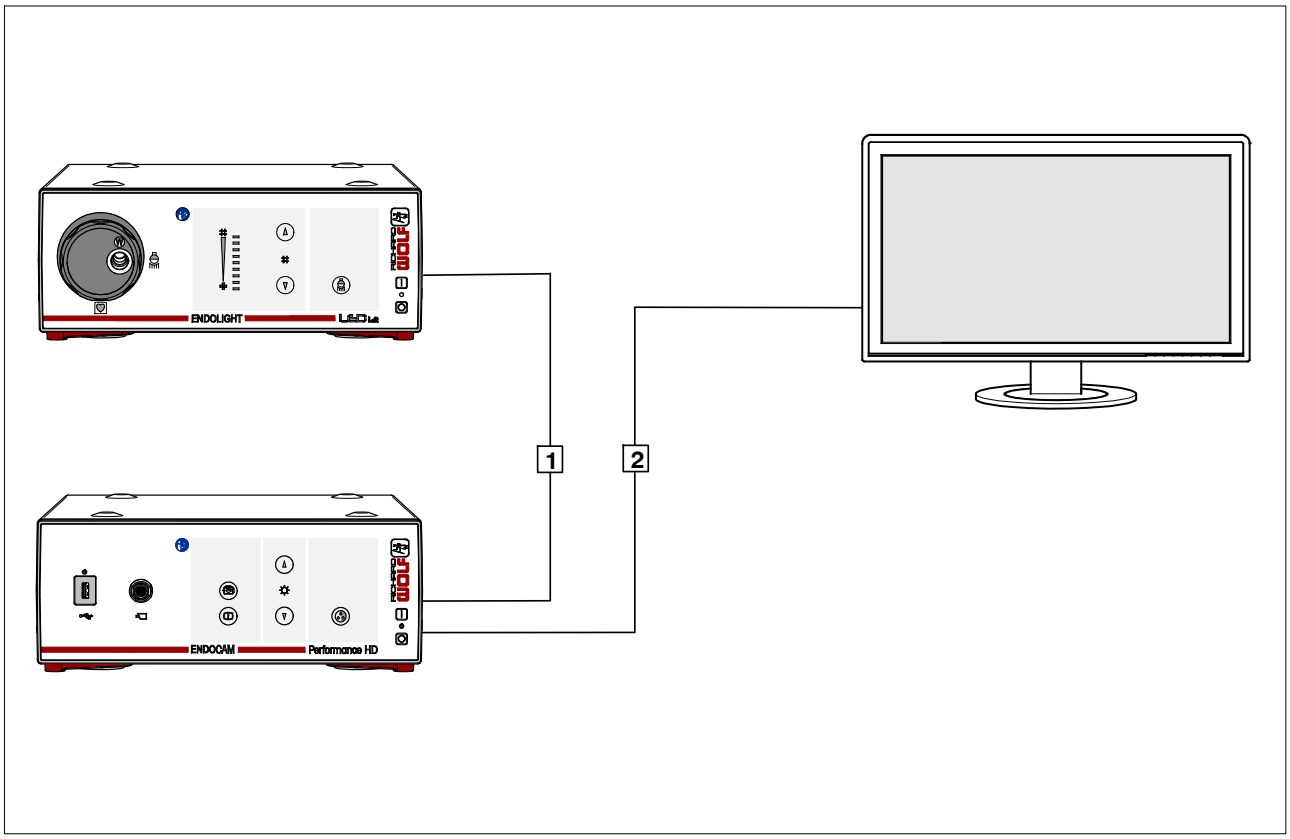

Legend

——— **Direct connection**

1 Remote control cable (Option) - Light On/Off if the camera head buttons are configured appropriately

2 Video cable to meet the signal requirements of the camera controller used

2 Illustration

2.1 Front view

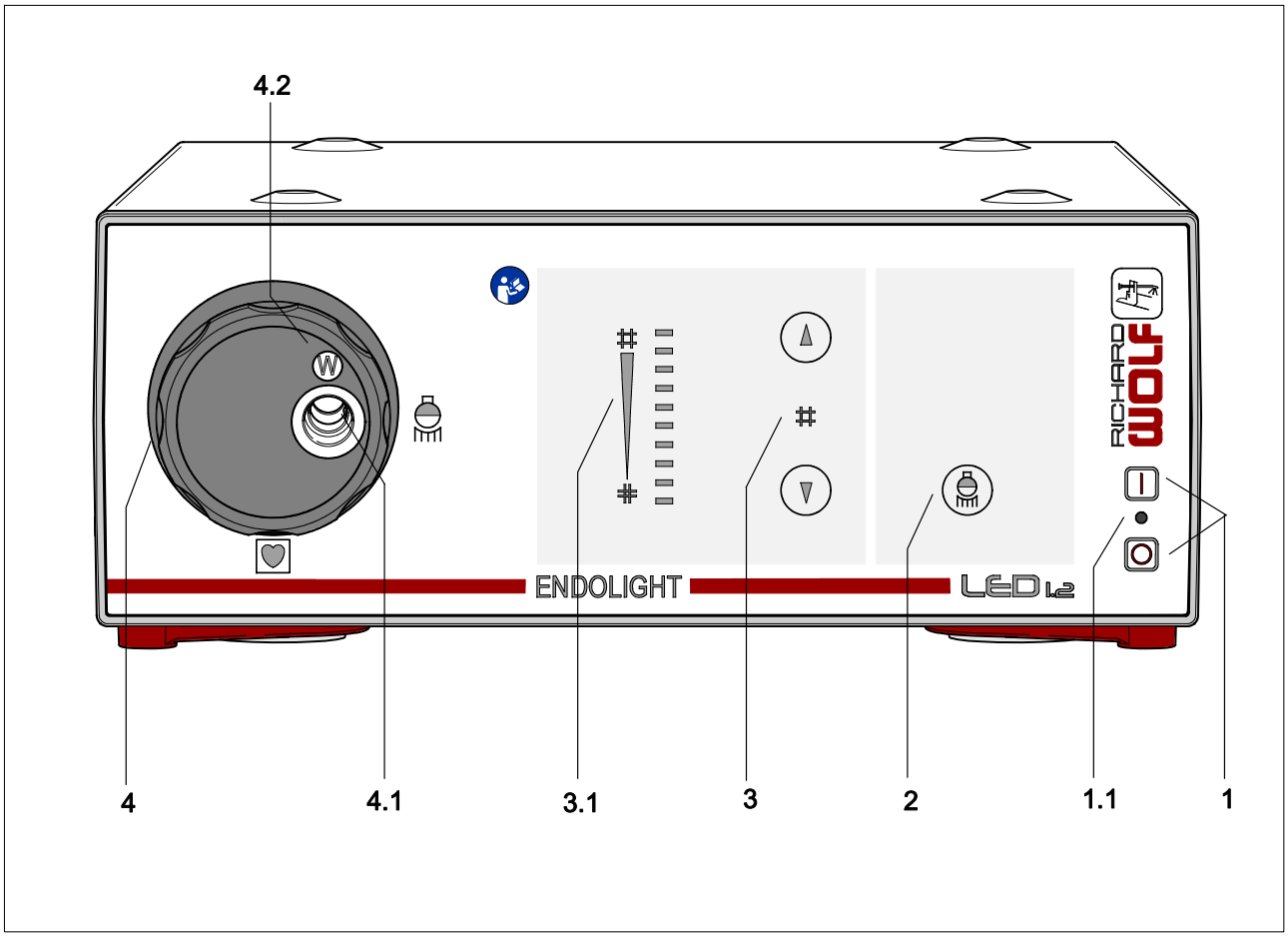

Legend

1	Power switch	**4**	Selector wheel with light sockets (type CF applied part)
1.1	Indicator light for line voltage (mains) ON/OFF	**4.1**	Light connecting socket
2	Light On / Off	**4.2**	Indication of selected light socket
3	Manual brightness control		
3.1	Brightness level indicator		

2.2 Rear view

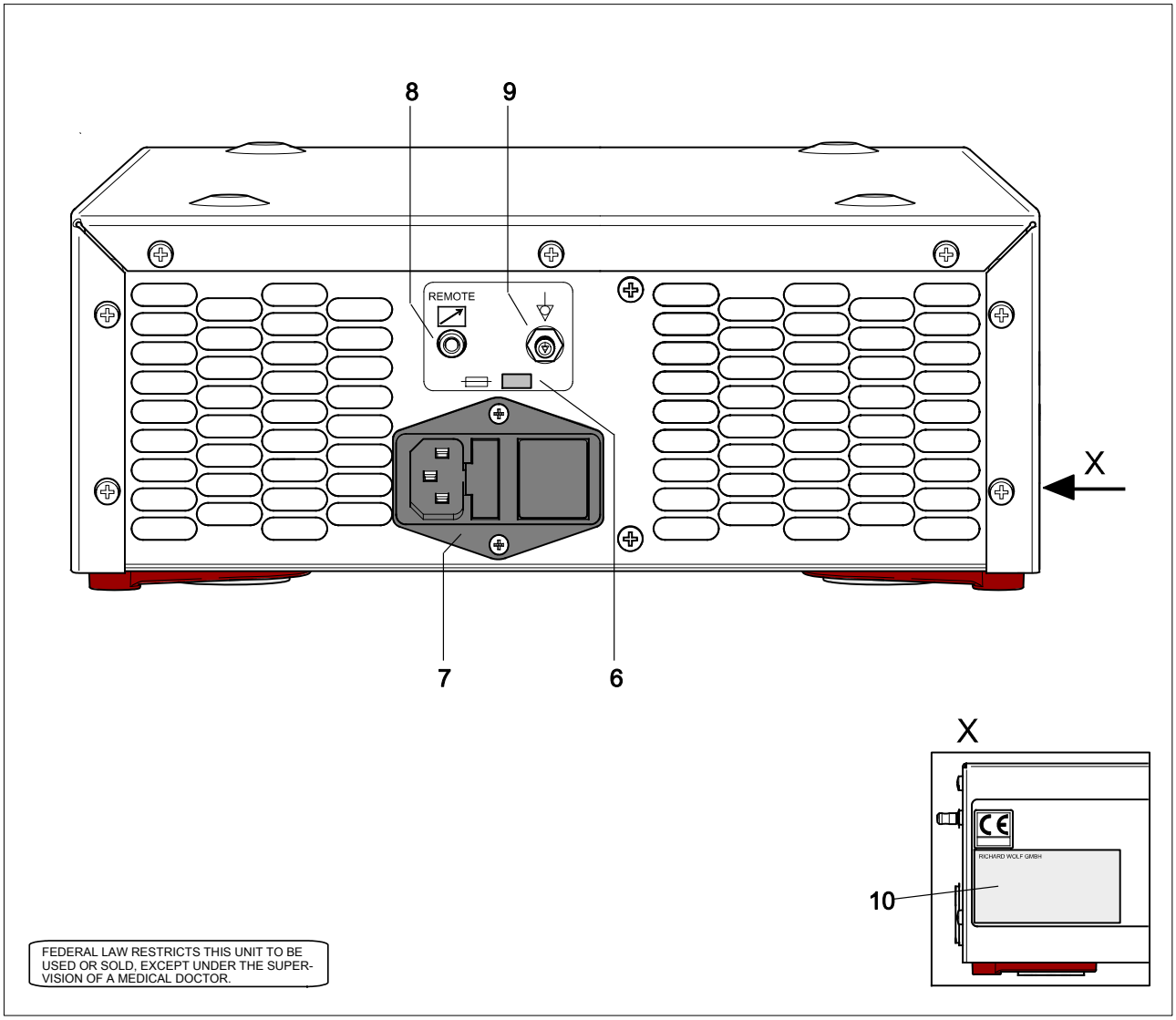

Legend

6	Fuse plate	9	Potential equalization connector
7	Power input connector with fuse holder	10	Identification plate
8	Remote input socket Connection for light On/Off remote control cable		

3 Setup

WARNING!
The device is not protected against explosions.
Explosion hazard.
Do not operate this device in areas where there is a danger of explosion.

WARNING!
Danger if a power supply without protective earth is used.
Danger of electric shock!
Connect the device only to a power supply with protective earth.

NOTE!
The line / mains voltage must correspond with the voltage indicated on the identification plate. Connect the device only via the supplied power cable or a power cable with the same specifications.
Do not block any ventilation slots!

CAUTION!
Danger of faults and malfunctions.
To guarantee the safety of the user, patient and others, use only accessories and spare parts as specified by the manufacturer of this product.
Other accessories or spare parts can cause the emission of increased electromagnetic radiation or reduced immunity against interference.

IMPORTANT!
*Medical electrical equipment is subject to special precautions with regard to electromagnetic compatibility (**EMC**).*
Make sure you follow the notes on EMC for installation and operation.
Medical electrical devices can be influenced by mobile HF communication devices.
If it is necessary to stack the devices or place them next to each other and HF interference is observed, make sure that the devices are operated as intended.

CAUTION!
Device failure due to automatic over-temperature cut-out.
In the case of insufficient air supply, the over-temperature cut-out may be triggered which will shut down the device during use.
Units with a cooling device [e.g. fan] require a minimum distance of 15 cm from the wall and unobstructed vent slots. Do not cover any openings required for cooling.
To prevent a possible accumulation of heat in the closed system cart, place the devices accordingly and/or provide vent slots.

NOTE!
To prevent the ventilation system from aspirating liquids it is not allowed to place any products or objects from which liquids may drip down on top or above the light projector.

3.1 Selecting the light socket

The light projector is equipped with a selector wheel (**4**) which has 4 different light sockets to also allow the connection of light cables of other manufacturers.

◇ Turn the light socket for the light cable to be used to the 3-o'clock position (**4.1**).

➧ The manufacturer's code is displayed in the window (**4.2**).

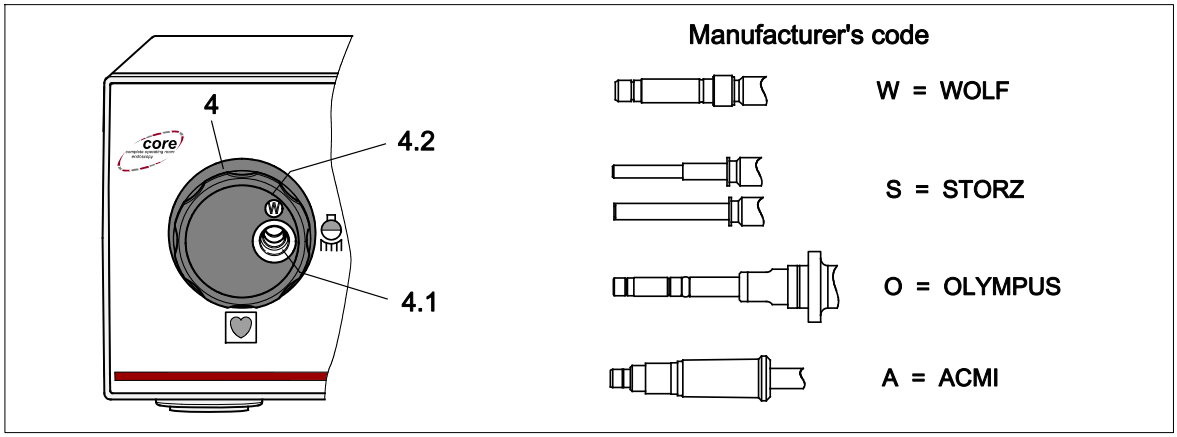

3.2 Preparation

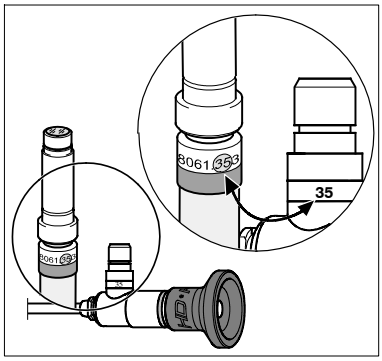

☞ ***NOTE!***

To achieve optimum light transmission, the fiber bundle diameters of the endoscope and fiber light cable must be the same.
Possible consequences when using a fiber light cable with

- *excessive diameter: excessive heating at the coupling point with the endoscope*
- *insufficient diameter: reduced light output, excessive heating of light socket and fiber light cable.*

For the suitable fiber bundle diameter please refer to the product number of the fiber light cable.

- *the two digits to the right of the decimal point in the type number must correspond with the code number on the cold-light connector.*

<u>Exception:</u>
Fiber light cable 8061.933 has a fiber bundle diameter of 3.5 mm.

◇ Connect additional devices such as a monitor and a camera controller in accordance with the connection diagram in section 1.

◇ Connect the endoscope in accordance with the illustration.

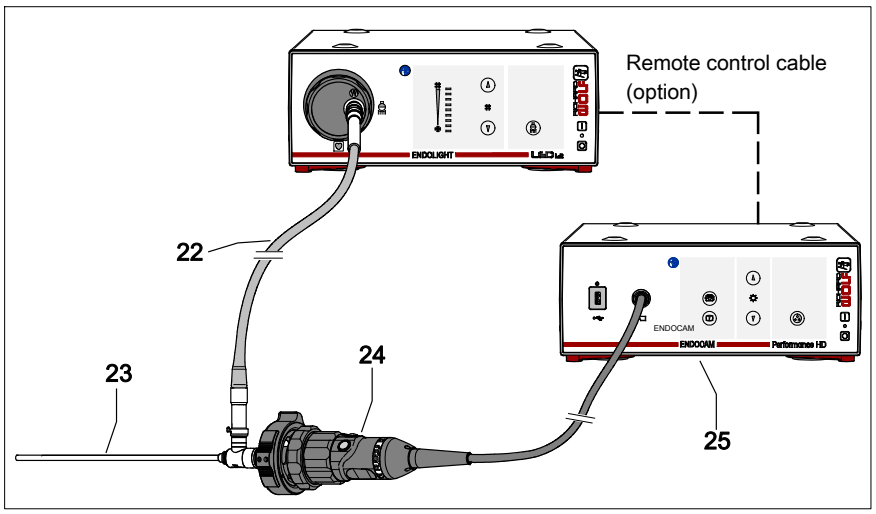

Legend

22	Fiber light cable	24	Camera head with objective lens
23	Endoscope	25	Camera controller

4 Checks

☞ *IMPORTANT!*
Run through the checks before and after each use.
Do not use the products if they are damaged or incomplete or have loose parts.
Return damaged products together with any loose parts for repair.
Do not attempt to do any repairs yourself.

4.1 Visual check

◇ Check the device and accessories for damage, loose or missing parts, hygiene and completeness.

◇ Check all connection cables and hoses for damage.

◇ Any inscriptions, lettering or labeling necessary for the safe intended use must be legible.
- ➧ Missing inscriptions, lettering or labeling leading to wrong handling or reprocessing must be reinstated.

4.2 Function check

☞ *IMPORTANT!*
To carry out the function checks, it is absolutely necessary that the devices be in good working order and in the correct device setup. This must also be guaranteed within the scope of a visual check.

This device is equipped with automatic function check routines which automatically detect and report various types of faults.

The device detects faults and errors that occur during the self test or during operation.

4.2.1 Device function after switching on the device

◇ Switch on the device with the power switch.
- ➧ When the self test starts also listen to a signal being sounded for checking the speaker function.
- ➧ After a successful self test the device is ready for operation.
- ➧ If a fault has occurred, the "**Light**“ button lights up in red and a warning signal is sounded (see section 7.1).
- ➧ The indicator lamp on the power switch is lit.
- ➧ The LED is not lit, the brightness is automatically set to 80%.
- ➧ The cooling fan will run only when the LED is swiched on.

4.2.2 Switching ON and OFF the LED

Switching on the LED:

◇ Push the “**Light**" button to swich on the LED.

➧ When the LED is on, the "**Light**“ button lights up in white.

➧ If **no** light cable is connected the LED is switched off.

Switching off the LED:

◇ Push the “**Light**" button again to switch off the LED.

4.2.3 Manual brightness adjustment

CAUTION!
Danger of glare.
Do not look into the open end of the light cable when the light cable is connected.

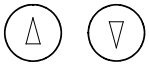

◇ The brightness can be adjusted manually over the entire range.

➧ The brightness is adjusted by increments of 10%.

➧ The setting is displayed on the level indicator.

5 Use

5.1 Operating principle

The ENDOLIGHT LED 1.2 light projector is used for illuminating the operating field in the patient's body. For this purpose the light is transmitted from the light source via a light cable to the instrument tip.

With activated shutter function (ELC ON) on the camera controller, a constant brightness level is achieved automatically with changing object distances.The maximum brightness depends on the manual preset at the light projector.

The color temperature of the LED light source is approx. 6500 K. This is important for true color rendering in particular when recording videos.

Optimum ventilation and adherence to the operating notes and instructions allows an LED service life of approx. 30000 h.

5.2 Controls and modes

5.2.1 Manual brightness adjustment

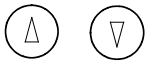

The brightness level can be adjusted using the manual brightness control. The brightness is **not** automatically readjusted.

- ➧ The selected target value is displayed on the level indicator.
- ➧ When the minimum or maximum setting is reached an acoustic signal sounds.

5.2.2 "Safe start" function

If the unit stops working because of a failure in the power supply lasting between 5 and 30 seconds, the **safe start** function is started automatically.

◇ The LED is switched off.

➧ The preselected brightness level remains stored.

◇ Switch on the LED using the**"Light"** button.

➧ The device adjusts to the preselected brightness level.

5.2.3 Temperature protection circuit

Blocked vent slots on the device rear panel or insufficient air circulation can cause increased temperatures inside the device.
A temperature protection circuit monitors the device temperature. In the case of overtemperature as a first step the LED intensity is continuously reduced and with a further increase in temperature the LED is shut down completely to avoid additional damage.
The fan speed is controlled as a function of temperature.

5.3 Operation of light projector

CAUTION!
Intense heat due to high light energy.
Insufficient distance between the tissue and the light exit area of the light cable or endoscope can lead to tissue coagulation.
Avoid direct contact between the light exit area and the tissue during endoscopy.

WARNING!
Fire hazard.
The light exit area of the light cable or endoscope must not be placed against heat-absorbing surfaces (dark drapes etc.) as this can lead to inadmissibly high temperatures or ignition.
Switch off the LED if you do not need the light for a period of time.

CAUTION!
Danger of burns.
Due to the high light energy of the light source, the adapter and glass surface of the light cable are extremely hot when the light cable is disconnected from the light projector.
Burns may result from unintentional contact.
Do not touch the adapter or glass surfaces of the light cable. Allow the light cable to cool down.

CAUTION!
Be careful if the brightness setting is at maximum in manual mode and the blooming picture is compensated using the camera's ELC.
Intense heat due to high light energy. In the case of tissue contact, coagulation is possible.
Heat load on the coupling point between the light cable and the endoscope.
Reduced service life, possible failure.The user may suffer burns.
Set the image brightness only to the value that is absolutely necessary.

5.3.1 Switching ON and OFF the LED

CAUTION!
Danger of glare.
Do not look into the open end of the light cable when the light cable is connected.

◇ Switch on the power switch of the light projector.

- After a successful self test the device is ready for operation.
- If a fault has occurred the "**Light**“ button blinks or lights up in red and a signal is sounded (see section 7.1).

Switching on the LED:

◇ Push the “**Light**" button to switch on the LED.

- When the LED is on the "**Light**“ button lights up in white.
- If **no** light cable is connected the LED is switched off.

Switching off the LED:

◇ Push the “**Light**" button again to switch off the LED.

5.3.2 Automatic switch-on of the device, i.e. "safe start“ (e.g. after power failure)

The device is without power for less than 5 seconds:

- The last parameters entered are used.
- If “**Light**” was on, the LED is switched on again.

If the device remains without power between 5 and 30 seconds:

- The last parameters entered are used.
- If the LED was on, the **safe start** function is activated automatically.
- Switch on the LED with the **"Light“** button.

If the device is without power supply for more than 30 seconds:

- A standard device start with self test is carried out.
- The LED is not lit, and the brightness is automatically set to 80%.

5.3.3 Remote function

If a button on the camera head has been configured appropriately, the LED can be switched on and off with this button.

Switching off the LED:

Actuating the configured button on the camera head switches off the LED.

Switching on the LED:

Actuating the configured button on the camera head or the "**Light**“ button switches on the LED. The preset target value is selected again.

5.3.4 Taking out of service

◇ To take the device out of service, switch off the power switch and disconnect the device from the power supply / mains.

☞ ***NOTE!***

The device warms up when the LED is in operation.
After shutdown, allow the device to cool down.

6 Reprocessing and maintenance

6.1 Reprocessing of device

⚠ *WARNING!*
Prevent humidity from entering the device.
Danger of electric shock!
Before reprocessing switch off and disconnect the device from the power supply / mains.

Clean the device with a soft cloth moistened with surface disinfectant, alcohol or spirit.
Follow the disinfectant manufacturer's instructions!

☞ *NOTE!*
For a description of the surface cleaning and disinfecting agents for devices and universal device carts / trolleys and utility carts approved by Richard Wolf, please refer to manual ***GA-J020 "Reprocessing of RICHARD WOLF Heat-stable Instruments"****.*

☞ *IMPORTANT!*
Make sure that no humidity enters the device. Do not use any cleaning agents, scouring agents or solvents on this device.

6.2 Maintenance

☞ *IMPORTANT!*
In the case of inquiries or in your correspondence please always indicate the product number and the serial number listed on the identification plate. Further documentation is available from the manufacturer on request.

Service-Hotline:	Phone:	++49-(0)-7043/35-389
	Fax:	++49-(0)-7043/35-1209

6.2.1 Maintenance intervals

☞ *IMPORTANT!*
To avoid any incidents or damage caused by aging and wear it is necessary to service the product and the accessories at adequate intervals. Depending on the frequency of use, but at least once a year, have an expert check the functional and operational safety of the equipment.

7 Technical description

7.1 Troubleshooting

☞ *NOTE!*
If the faults cannot be corrected with the help of this table, please contact our service department or return the device for repair.
➧ *Do not attempt to do any repairs yourself!*

7.1.1 Device errors

Error	Possible cause	Corrective action
Device is without function, the indicator light on the power switch is not lit	Power switch is not on Power cable is not connected Line/mains fuse inside device defective No line voltage (mains) or power supply unit defective	➧Actuate the power switch ➧Connect the power cable ➧Replace the fuse ➧Check in-house power supply, or contact service department
LED brightness is continuously reduced. LED shuts down during operation	Overheating	➧ Remove blockage, (due to installation, blocked fan, etc.) ➧Contact service department.
Image too dark	Fiber bundle diameter is not compatible with the endoscope used. Incorrect or poor locking between light cable and light source / endoscope and/or light cable of poor quality.	➧ Use a suitable fiber light cable. ➧Contact service department. ➧Use only approved light cables with their corresponding adapters.
Warning: "**Light**" button lights up in red and a warning is sounded.	Current limitation is active Thermistor defective (current limitation)	➧Contact service department.
Error: "**Light**" button blinks in red and three wanings are sounded.	Switch-on test has failed. LED defective Overtemperatur Failure of power supply unit	➧ Carry out a device restart ➧ Contact service department if problem occurs again. ➧Contact service department. ➧ Allow the device to cool down Check that the louvers (vent slots) and the air flow is unblocked (e.g. wall clearance, closed system cart) ➧ Carry out a device restart ➧ Contact the service department if problem occurs again.

7.1.2 Lamp function errors

Error	Possible cause	Corrective action
LED cannot be switched on again.	Power supply unit or LED defective Device too hot	➧Contact service department. ➧ Allow device to cool down

7.1.3 Fault in video mode

Error	Possible cause	Corrective action
Image too bright / dark	ELC of camera controller deactivated	➧Switch on ELC on camera controller
Malfunction of remote function on camera head.	Remote-cable not connected.	➧Connect remote cable in accordance with wiring schematic in section 1

7.2 Technical data

Model / type	Voltage V ~	Frequency Hz	Power consumption VA	Current rating A	Fuse A
5161001	100 - 240	50 / 60	120	1,1 - 0,5	T 2.0 L 250 V
5161011 (USA)	100 - 240	50 / 60	120	1,1 - 0,5	T 2.0 L 250 V

Electromagnetic compatibility EMC to	IEC / EN 60601-1-2
Medical devices directive 93/42/EEC	Class I
Safety class to IEC / EN 60601-1 ; (UL 60601-1 / CSA C22.2 No.601.1 - for USA)	I
Protection against electric shock	Type CF applied part
Noise level	24 dB(A) at 24ºC
Mode / duty factor	Continuous operation
Degree of protection against the ingress of liquids	IP 20 (not protected)
Degree of protection when flammable mixtures are present	This device is not protected against explosions (Do not operate this device in ignitable atmosphere)
Weight	8.9 kg (19.6 lbs)
Dimensions WxHxD	300 mm x 120 mm x 424 mm

7.2.1 Technical Data of LED Light Source

Model / Output	76 W LED (equivalent to a 180 W xenon light source)
Color temperature	6500 K
Service life	approx. 30,000 h

7.2.2 Interfaces

Remote input	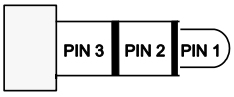	2 x 3.5 mm jack, stereo Normally open contact: PIN 1 (max. 15V DC pull-up) against PIN 3 (GND) PIN 2 must not be assigned !

7.3 Operating, storage, transport and shipping conditions

Operating conditions	+ 10ºC to + 40ºC , 30% to 75% rel. humidity atmospheric pressure 700 hPa to 1060 hPa
Storage, transport and shipping conditions	- 20ºC to + 60ºC , 10% to 90% rel. humidity atmospheric pressure 700 hPa to 1060 hPa

☞ ***NOTE!***
To prevent damage during transport or shipment of the products we recommend using the original packaging material.

7.4 Spare parts and accessories

Model / type	Designation
64268.014	Fuse T 2.0 L 250 V (packaging unit: 10 per pkg)
2440.03	Power cable, 3.0 m long
N710006	Power cable (USA), 8.0 ft long
5502.991	Remote control cable, 1.5 m
8061.16	Fiber light cable, dia. ∅ 1.6 mm, 1.8 m long
8061.253	Fiber light cable, dia. ∅ 2.5 mm, 2.3 m long
8061.353	Fiber light cable, dia. ∅ 3.5 mm, 2.3 m long
8061.453	Fiber light cable, dia. ∅ 4.5 mm, 2.3 m long
8063.353	Fiber light cable (high-temperature resistant), dia. ∅ 3.5 mm, 2.3 m long
8095.07	Adapter, light cable to projector
	➧ Further accessories on request

7.5 Replacing the device fuses

CAUTION!
The specifications of the device fuses must correspond with the fuse ratings on the identification plate.
Use only the fuses specified in the spare parts list.

★ *Power input connector with fuse holder*

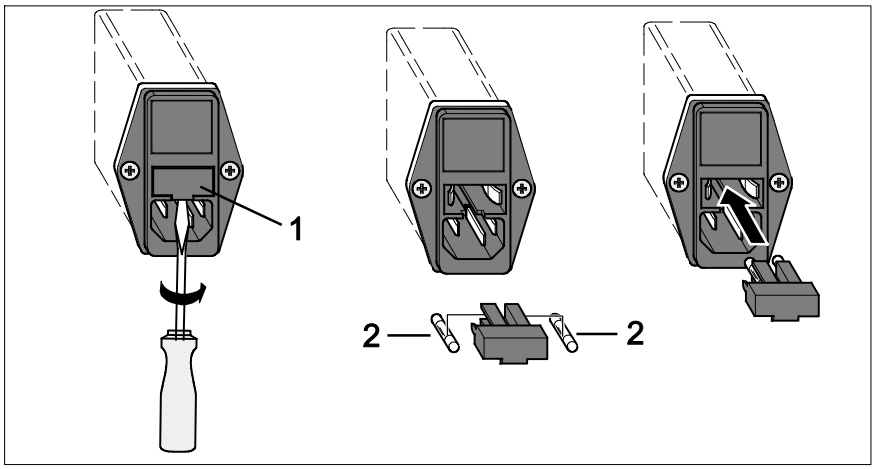

◇ Switch off the device and disconnect the power cable from the wall socket and from the power input connector of the device.
◇ Unscrew the fuse holder [1] using a screwdriver.
◇ Take the fuses [2] out of the fuse holder [1] and replace.
◇ Reinsert the fuse holder [1] and push in until it clocks into place.

7.5.1 Disposal of product, packaging material and accessories

For the disposal follow the laws and regulations valid in your country.
➧ For further information please contact the manufacturer.